DATA SHEET

Company		Date	07/02/2023
Project		Item	
		Ref No.	

SNSP 80-160-11

Single stage, radially split, volute casing type conforming to EN 733 and EU 547/2012

Operating Point Data

Capacity	:	Power at Duty Point	:
Head	:	Frequency	: 50 Hz
Efficiency (%)	:	Voltage	: 380 V
Impeller Diameter	: 146 mm	Motor Power	: 11.00 kW
NPSHr	:	Nominal Speed	: 2935 rpm
Shut Off Head	: 25.4 m		

Liquid Data

Liquid	: Water	Density	: 998.30 kg/m³
Temperature	: 20 °C	Viscosity	: 1.005 cSt

Pump Data

Design	: Single Stage, End Suction	Type of Coupling	: Standard
Installation	: Horizontal	Direction Of Rotation	: Clockwise from the drive end
Suction Flange	: EN 1092 PN 16-DN 100	Impeller Type	: Radial impeller
Discharge Flange	: EN 1092 PN 16-DN 80	Type of Bearing	: Closed Type Bearing
Pressure rating	: PN10	Type of Shaft Sealing	: Soft Packing

Minimum Efficiency Index (MEI) >= 0,4

Materials

Volute Casing	0.6025 / GG25 / EN-GJL-250 / ASTM A48 Class 40B
Casing Cover	0.6025 / GG25 / EN-GJL-250 / ASTM A48 Class 40B
Impeller	0.6025 / GG25 / EN-GJL-250 / ASTM A48 Class 40B
Shaft	1.0503 / C45 / AISI 1045
Bearing Housing	0.6025 / GG25 / EN-GJL-250 / ASTM A48 Class 40B

Operating Point Data

Company		Date	07/02/2023
Project		Item	
		Ref No.	

SNSP 80-160-11

Single stage, radially split, volute casing type conforming to EN 733 and EU 547/2012

Capacity:		NPSHr:	
Head:		Motor Power:	11.00 kW
Efficiency (%):		Nominal Speed:	2935 rpm
Power at Duty Point:		Frequency:	50 Hz
Viscosity:	1.005 cSt	Density:	998.30 kg/m³

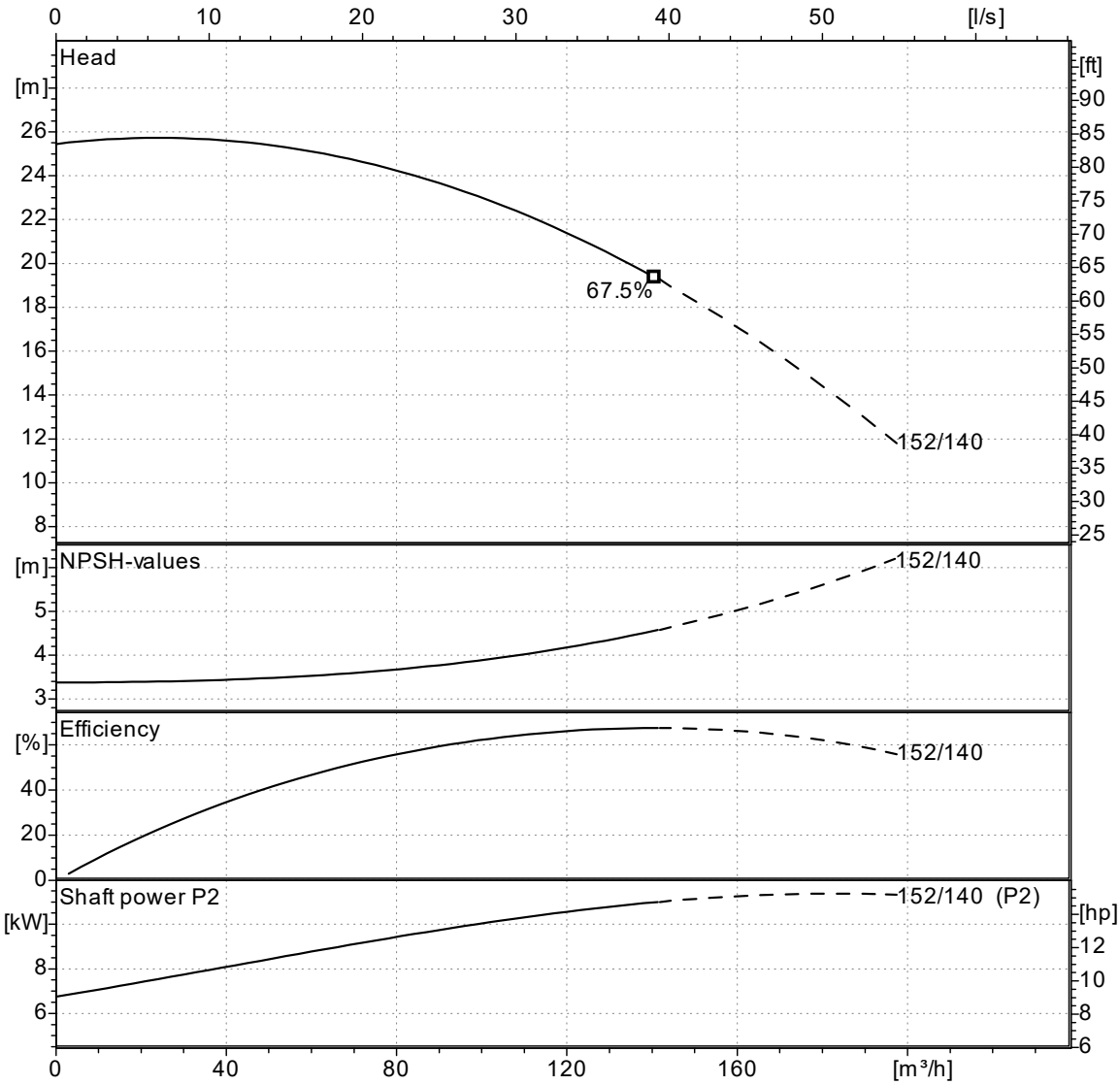

Curves compatible with ISO 9906:2012 Gr 3B

NPSHa > NPSHr + 1m

Note : The motor power is not sufficient for dotted area.

Company		Date	07/02/2023
Project		Item	
		Ref No.	

SNSP 80-160-11

Single stage, radially split, volute casing type conforming to EN 733 and EU 547/2012

Pump Dimensions

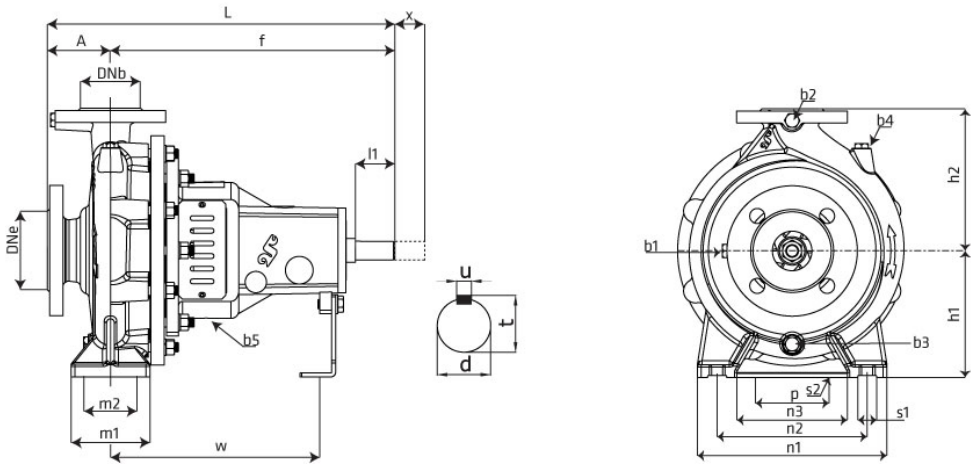

Name	Value
A	125
b1	1/4"
b2	1/4"
b3	3/8"
b4	3/8"
b5	3/8"
d	24
DBe	100
DNb	80
f	360
h1	180
h2	225
L	485
l1	50
m1	125
m2	95
n1	320
n2	250
n3	190
p	110
s1	14
s2	14
t	27
u	8
w	260
W	47 kg
x	140

Note : b1, b2 and b4 holes are not drilled in ductile iron, cast steel and stainless steel volute casings.

Flange Dimensions

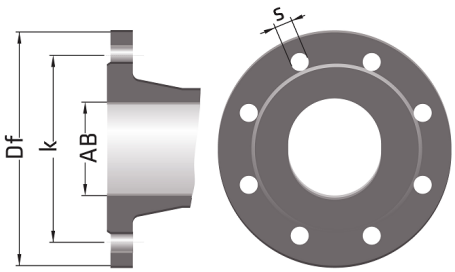

Suction Flange	Discharge Flange
AB = 100	AB = 80
Df = 220	Df = 200
k = 180	k = 160
n = 8	n = 8
s = 19	s = 19

" n " number of holes

Company		Date	07/02/2023
Project		Item	
		Ref No.	

SNSP 80-160-11

Single stage, radially split, volute casing type conforming to EN 733 and EU 547/2012

Motor Data

Efficiency Level	:
Motor type	: Three-Phase Asynchronous Motor
Motor Power	: 11.0 kW
Rated Speed	: 2950 rpm
Voltage	: 380 V
Rated Current	: 0.00 A
Frequency	: 50 Hz
Motor Phase	: 3
Service Factor	: 1.15
Insulation Class	: F
Degree of Protection	: IP 55
Efficiency	: - %
Power factor	: 0.00