**DATA SHEET**

| | | | |
|---|---|---|---|
| Company | | Date | 03/02/2023 |
| Project | | Item | |
| | | Ref No. | |

## SNSP 50-160-0.75

Single stage, radially split, volute casing type conforming to EN 733 and EU 547/2012

### Operating Point Data

| | | | |
|---|---|---|---|
| Capacity | : | Power at Duty Point | : |
| Head | : | Frequency | : 50 Hz |
| Efficiency (%) | : | Voltage | : 400 V |
| Impeller Diameter | : 143 mm | Motor Power | : 0.75 kW |
| NPSHr | : | Nominal Speed | : 1440 rpm |
| Shut Off Head | : 6.3 m | | |

### Liquid Data

| | | | |
|---|---|---|---|
| Liquid | : Water | Density | : 998.30 kg/m³ |
| Temperature | : 20 °C | Viscosity | : 1.005 cSt |

### Pump Data

| | | | |
|---|---|---|---|
| Design | : Single Stage, End Suction | Type of Coupling | : Standard |
| Installation | : Horizontal | Direction Of Rotation | : Clockwise from the drive end |
| Suction Flange | : EN 1092 PN 16-DN 65 | Impeller Type | : Radial impeller |
| Discharge Flange | : EN 1092 PN 16-DN 50 | Type of Bearing | : Closed Type Bearing |
| Pressure rating | : PN10 | Type of Shaft Sealing | : Soft Packing |

Minimum Efficiency Index (MEI) >= 0,4

### Materials

| | |
|---|---|
| Volute Casing | 0.6025 / GG25 / EN-GJL-250 / ASTM A48 Class 40B |
| Casing Cover | 0.6025 / GG25 / EN-GJL-250 / ASTM A48 Class 40B |
| Impeller | 0.6025 / GG25 / EN-GJL-250 / ASTM A48 Class 40B |
| Shaft | 1.0503 / C45 / AISI 1045 |
| Bearing Housing | 0.6025 / GG25 / EN-GJL-250 / ASTM A48 Class 40B |

## Operating Point Data

| | | | |
|---|---|---|---|
| Company | | Date | 03/02/2023 |
| Project | | Item | |
| | | Ref No. | |

## SNSP 50-160-0.75

Single stage, radially split, volute casing type conforming to EN 733 and EU 547/2012

| | | | |
|---|---|---|---|
| Capacity: | | NPSHr: | |
| Head: | | Motor Power: | 0.75 kW |
| Efficiency (%): | | Nominal Speed: | 1440 rpm |
| Power at Duty Point: | | Frequency: | 50 Hz |
| Viscosity: | 1.005 cSt | Density: | 998.30 kg/m³ |

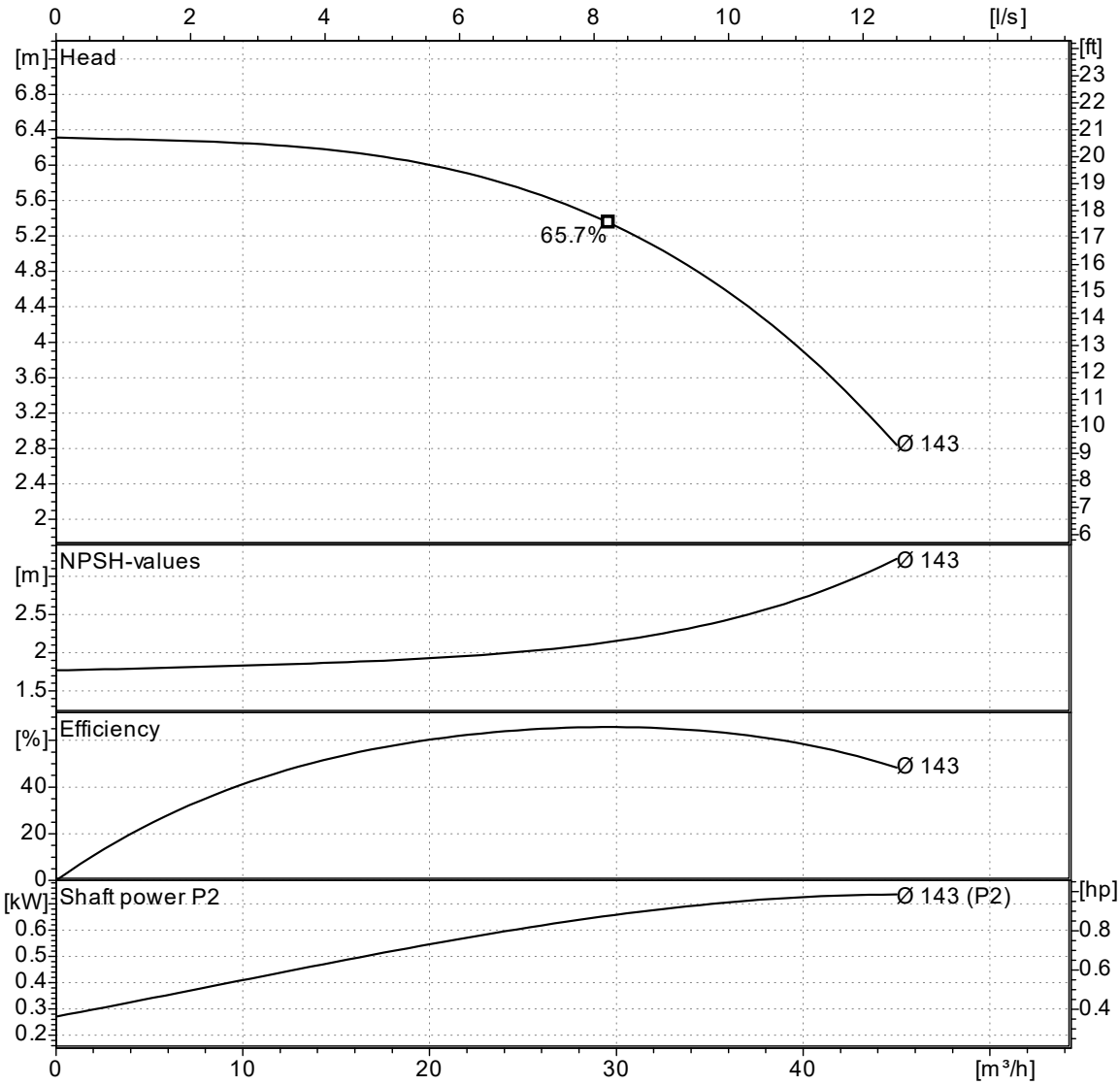


Curves compatible with ISO 9906:2012 Gr 3B

NPSHa > NPSHr + 1m

Note : The motor power is not sufficient for dotted area.

| Company | | Date | 03/02/2023 |
|---|---|---|---|
| Project | | Item | |
| | | Ref No. | |

## SNSP 50-160-0.75

Single stage, radially split, volute casing type conforming to EN 733 and EU 547/2012

### Pump Dimensions

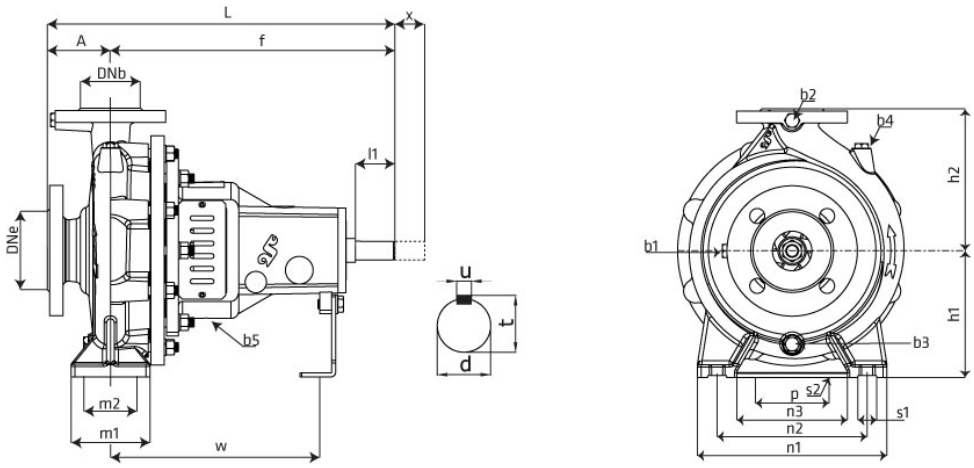


| Name | Value |
|---|---|
| A | 100 |
| b1 | 1/4" |
| b2 | 1/4" |
| b3 | 1/4" |
| b4 | 1/4" |
| b5 | 3/8" |
| d | 24 |
| DBe | 65 |
| DNb | 50 |
| f | 360 |
| h1 | 160 |
| h2 | 180 |
| L | 460 |
| l1 | 50 |
| m1 | 100 |
| m2 | 70 |
| n1 | 265 |
| n2 | 212 |
| n3 | 165 |
| p | 110 |
| s1 | 14 |
| s2 | 14 |
| t | 27 |
| u | 8 |
| w | 260 |
| W | 37 kg |
| x | 100 |

Note : b1, b2 and b4 holes are not drilled in ductile iron, cast steel and stainless steel volute casings.

### Flange Dimensions

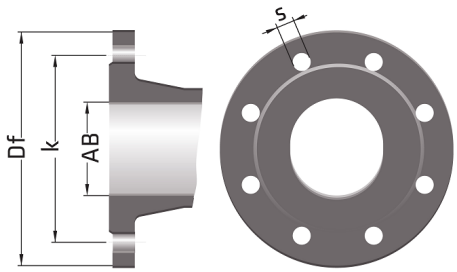


| Suction Flange | Discharge Flange |
|---|---|
| AB = 65 | AB = 50 |
| Df = 185 | Df = 165 |
| k = 145 | k = 125 |
| n = 4 | n = 4 |
| s = 19 | s = 19 |

" n " number of holes

| | | | |
|---|---|---|---|
| Company | | Date | 03/02/2023 |
| Project | | Item | |
| | | Ref No. | |

## SNSP 50-160-0.75

Single stage, radially split, volute casing type conforming to EN 733 and EU 547/2012

## Motor Data

| | |
|---|---|
| Efficiency Level | : |
| Motor type | : Three-Phase Asynchronous Motor |
| Motor Power | : 0.8 kW |
| Rated Speed | : 1450 rpm |
| Voltage | : 400 V |
| Rated Current | : 0.00 A |
| Frequency | : 50 Hz |
| Motor Phase | : 3 |
| Service Factor | : 1.15 |
| Insulation Class | : F |
| Degree of Protection | : IP 55 |
| Efficiency | : - % |
| Power factor | : 0.00 |