DATA SHEET

Company		Date	08/02/2023
Project		Item	
		Ref No.	

SNSP 200-500-250

Single stage, radially split, volute casing type conforming to EU 547/2012

Operating Point Data

Capacity	:	Power at Duty Point	:
Head	:	Frequency	: 50 Hz
Efficiency (%)	:	Voltage	: 400 V
Impeller Diameter	: 495 mm	Motor Power	: 250.00 kW
NPSHr	:	Nominal Speed	: 1450 rpm
Shut Off Head	: 88.1 m		

Liquid Data

Liquid	: Water	Density	: 998.30 kg/m³
Temperature	: 20 °C	Viscosity	: 1.005 cSt

Pump Data

Design	: Single Stage, End Suction	Type of Coupling	: Standard
Installation	: Horizontal	Direction Of Rotation	: Clockwise from the drive end
Suction Flange	: EN 1092 PN 16-DN 250	Impeller Type	:
Discharge Flange	: EN 1092 PN 16-DN 200	Type of Bearing	: Oil Lubricated Bearing
Pressure rating	: PN10	Type of Shaft Sealing	: Soft Packing

Minimum Efficiency Index (MEI) >= 0,4

Materials

Volute Casing	0.6025 / GG25 / EN-GJL-250 / ASTM A48 Class 40B
Casing Cover	0.6025 / GG25 / EN-GJL-250 / ASTM A48 Class 40B
Impeller	0.6025 / GG25 / EN-GJL-250 / ASTM A48 Class 40B
Shaft	1.0503 / C45 / AISI 1045
Bearing Housing	0.6025 / GG25 / EN-GJL-250 / ASTM A48 Class 40B

Operating Point Data

Company		Date	08/02/2023
Project		Item	
		Ref No.	

SNSP 200-500-250

Single stage, radially split, volute casing type conforming to EU 547/2012

Capacity:		NPSHr:	
Head:		Motor Power:	250.00 kW
Efficiency (%):		Nominal Speed:	1450 rpm
Power at Duty Point:		Frequency:	50 Hz
Viscosity:	1.005 cSt	Density:	998.30 kg/m³

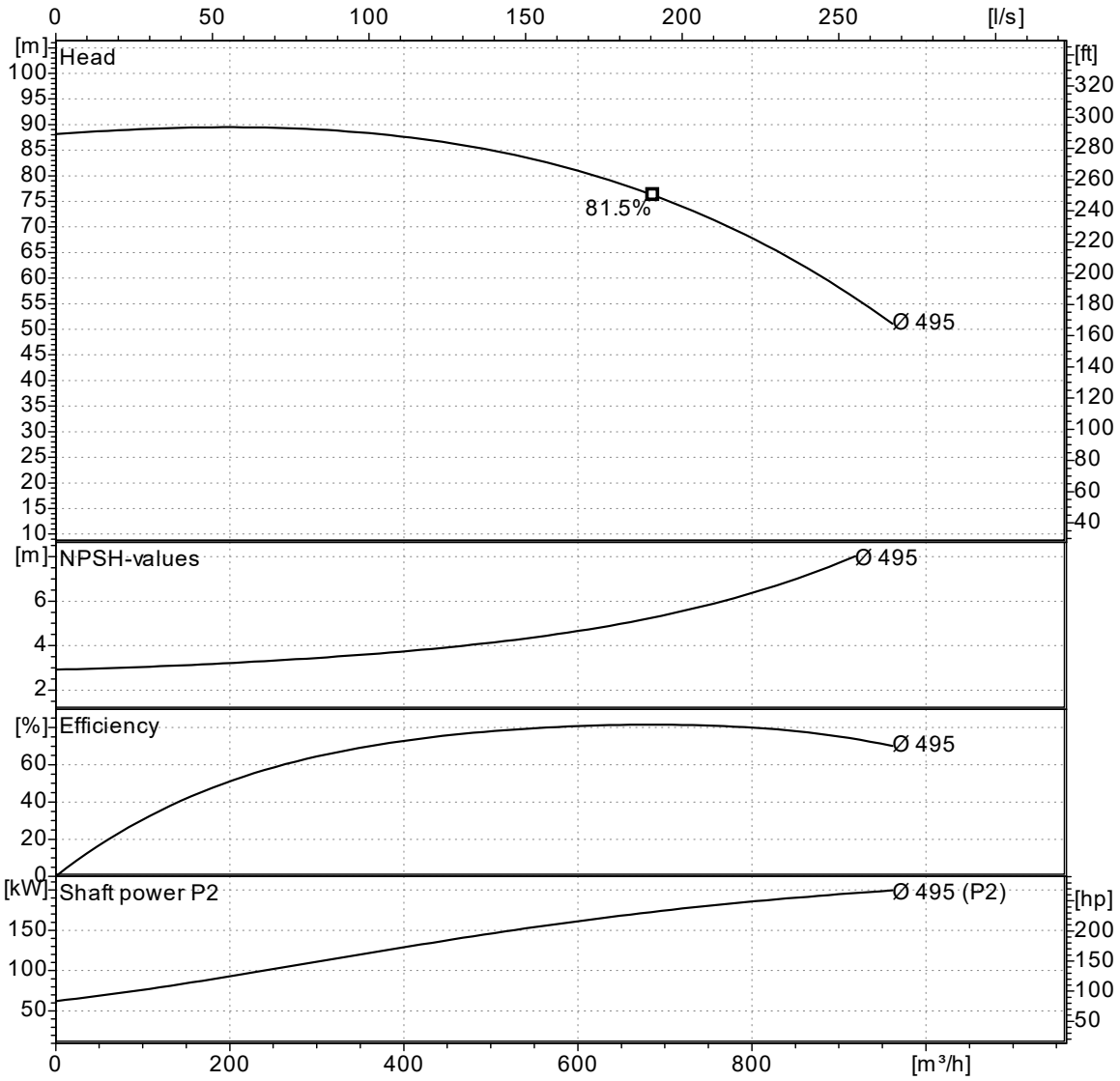

Curves compatible with ISO 9906:2012 Gr 3B

NPSHa > NPSHr + 1m

Note : The motor power is not sufficient for dotted area.

Company		Date	08/02/2023
Project		Item	
		Ref No.	

SNSP 200-500-250

Single stage, radially split, volute casing type conforming to EU 547/2012

Pump Dimensions

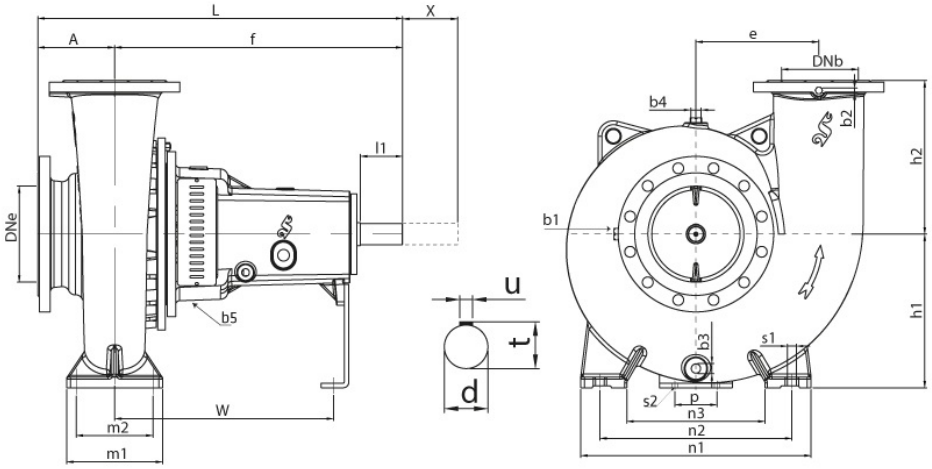

Name	Value
A	200
b1	1/4"
b2	1/4"
b3	3/4"
b4	3/4"
b5	1/2"
d	68
DBe	250
DNb	200
e	370
f	800
h1	450
h2	475
L	1000
l1	140
m1	300
m2	200
n1	720
n2	600
n3	435
p	140
s1	27
s2	20
t	69
u	18
w	560
W	-
x	250

Note : b1, b2 and b4 holes are not drilled in ductile iron, cast steel and stainless steel volute casings.

Flange Dimensions

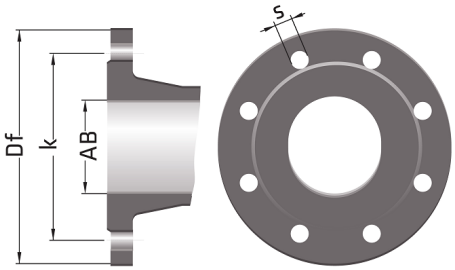

Suction Flange	Discharge Flange
AB = 250	AB = 200
Df = 405	Df = 340
k = 355	k = 295
n = 12	n = 12
s = 28	s = 23

" n " number of holes

Company		Date	08/02/2023
Project		Item	
		Ref No.	

SNSP 200-500-250

Single stage, radially split, volute casing type conforming to EU 547/2012

Motor Data

Efficiency Level	:
Motor type	: Three-Phase Asynchronous Motor
Motor Power	: 250.0 kW
Rated Speed	: 1450 rpm
Voltage	: 400 V
Rated Current	: 0.00 A
Frequency	: 50 Hz
Motor Phase	: 3
Service Factor	: 1.15
Insulation Class	: F
Degree of Protection	: IP 55
Efficiency	: - %
Power factor	: 0.00